LONG WHEELBASE

CANTER 918

DUONIC AMT

2019 MODEL
ADVANCED SAFETY SYSTEMS

GVM:
8,550kg

Power / Torque:
129kW / 430Nm

Wheelbase:
3,850mm (G) / 4,300mm (H)

- **Electronic Brake System** NEW
- **Electronic Stability Control** NEW
- **Active Emergency Braking System** NEW
- **Lane Departure Warning System** NEW
- **5yr / 200,000km warranty** NEW
- **30,000km service intervals**

fuso.co.nz

FUSO

SPECIFICATIONS - CANTER 918 LWB

MODEL					WHEELBASE (mm)	GVM (kg)	GCM (kg)
4x2 918	WIDE CAB	6 SP.	AMT	FECX1GR3SFBD	3,850 (G)	8,550	12,050
4x2 918	WIDE CAB	6 SP.	AMT	FECX1HR3SFBD	4,300 (H)	8,550	12,050

ENGINE

Engine Version	FUSO 4P10-T6 EURO 5 Diesel
Configuration	4 Cyl. In-line DOHC, 4-Valve
Type	Variable Geometry Turbo Charged Air to Air Intercooled
Displacement	3 litre (2998cc)
Power (DIN)	129kW @ 2860~3500rpm
Torque (DIN)	430Nm @ 1600~2860rpm
Maximum Engine Speed	4100rpm
Compression Ratio	17.5:1
Cooling System / Oil Cooler	Water cooled with Viscous fan, 14.1L capacity Engine oil cooler
Air Cleaner	Paper Element Type with Restrictor Indicator. Vertical Intake Mounted on Clean Air Side (RH)
Emission Control	Diesel Particulate Filter (DPF) Exhaust Dash Display DPF Status 0~9 (Empty~Full) Parked Regeneration possible from 7~9 Selective Catalytic Reduction (SCR) after-treatment system (BlueTec)
Emission Level	EURO 5 (ADR 80/03) and EEV rated (Enhanced Environmentally-Friendly Vehicle)

4P10-T6

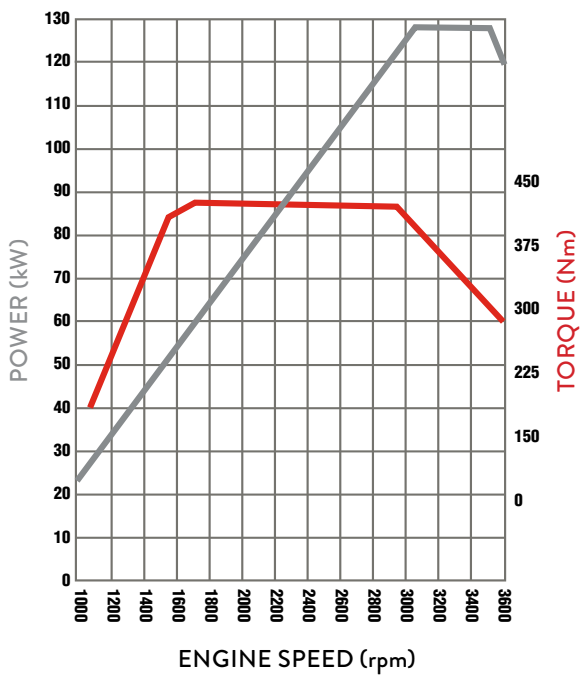

FUEL

Injection System	Bosch Common Rail Direct Injection
	Bosch Piezo Technology Injectors
Tank Type	Rectangular Steel Tank with Locking Cap
Fuel Capacity (L)	100
Filtration	Filter with Water Separator and Indicator Sensor
AdBlue Exhaust Fluid Capacity (L)	12

ELECTRICAL

Voltage	12V Negative Earth
Alternator Capacity	12V-110 amp
Battery Specification	Heavy Duty 115D31L x 2
Headlamp Type	Halogen 2 x 55W / 60W
Fog lamp in bumper	Standard

CLUTCH

Clutch Model	Duonic Automated Manual (no clutch pedal)
Type	Dual Clutch (Wet Multi-plate)

TRANSMISSION

Version	FUSO DUONIC M038S6
Type/Speeds	6 Speed Automated Manual with Auto and Manual Modes
Features	Virtually Instant Gear Changes In-Dash Gear Lever with Park Brake Position ECO Mode to Minimise Fuel Usage
Ratios	1st: 5.397 4th: 1.474 Rev. 5.397 2nd: 3.788 5th: 1.000 3rd: 2.310 6th: 0.701
PTO Opening	LH Side

FRONT AXLE

Axle Version	FUSO F350T "I" Beam
Design Capacity (kg)	3,100
Max Operating Capacity (kg)	3,100

FRONT SUSPENSION

Type	Taper leaf spring with Stabiliser Bar and Double Acting Shock Absorbers
Size (mm)	1,150 x 70

REAR AXLE

Axle	FUSO D035 Full Floating Banjo
Ratio	DUONIC 6.166:1
Design Capacity (kg)	6,000
Max Operating Capacity (kg)	6,000

REAR SUSPENSION

Type	Steel Suspension
Details	Multi Leaf with Stabiliser Bar and Double Acting Shock Absorbers
Size Main Leaves (mm)	1,250 x 70
Size Helper Leaves (mm)	880 x 70

STEERING

Power Assisted	Tilt/Telescopic Adjustable Steering Wheel

BRAKES

Type	Hydraulic Dual Circuit with Front and Rear Twin Caliper Disc Brakes
Size Front / Rear (mm)	310 x 40
Features	ABS + EBD + EBS Exhaust Brake Brake Priority System
Park Brake	Transmission Mounted

SPECIFICATIONS - CANTER 918 LWB

2019 MODEL
ADVANCED SAFETY SYSTEMS

WHEELS AND TYRES

Wheel Size	17.5 x 6.0-127
Tyre Size All	215 / 75R17.5
Spare Tyre Carrier	Yes

CHASSIS

Size (mm)	212 x 65 x 6

Refer to the bodybuilders guidelines on the Fuso website (www.fuso.co.nz) before mounting a body or modifying the chassis

INSTRUMENTS

Gauges	Speedometer with Odometer; Tachometer; Fuel Level; Water Temperature; AdBlue Level
Colour Information Display	Fuel Consumption; DPF Bar Chart from 1~9 Water Temperature; Maintenance Reminder System; Date and Time; Tripmeters x 2

STANDARD FEATURES

Cab Cooling and Heating	Air Conditioner / Heater / Demister
Accessory Power	12V Accessory Power Outlet / Cigar Lighter
Driving	Keyless Central Locking; Electric Windows
Storage	Dual Overhead Storage Pockets; In-Dash Centre Document Storage; Door Storage Pockets; Lockable Glove Box

CAB FEATURES

Type	All Steel Forward Control Fixed Cab
Mounting	Hydroelastic 4 Point
Colour	Natural White (W31)
Interior	Fully Trimmed cab with vinyl floor covering
Seating Capacity	3
Seat (driver)	Heavy Duty Suspended with LH Arm Rest, Adjustable Lumbar Support and Weight Adjustment
Seats (passenger)	Flat Folding, 2 Passenger Bench

SERVICE INTERVALS

30,000km full service / 15,000km safety inspection
30,000km full service intervals, depending on application/use.
15,000km safety inspection, with greasing, required to maintain warranty cover and ensure optimum performance.

WARRANTY

5 years / 200,000km NEW
Simply have your vehicle serviced at an authorised FUSO Service Centre, at the recommended servicing intervals, and you are covered by an additional 2 year/100,000km FUSO warranty on top of the first 3 years/100,000km. That's a total of 5 years/200,000km cover.
Refer to terms and conditions in the FUSO warranty booklet for full details.

SAFETY FEATURES

ACTIVE SAFETY FEATURES

Electronic Brake System (EBS)	Yes	NEW
Electronic Stability Control (ESC)	Yes	NEW
Active Emergency Braking System (AEBS)	Yes	NEW
Lane Departure Warning System (LDWS)	Yes	NEW

CAB

Structure	ECE R-29 Reinforced Cab Side Intrusion Bar	
Airbags	Driver's (steering wheel) Passenger's (dashboard)	NEW
Seatbelts	ELR 3-Point (+ height-adjustable with pre tensioner for driver) Lap Belt (centre passenger)	
Driver's Seat	Spring-suspended	
Steering Wheel	Energy-absorbing Adjustable (height and reach)	
Rearview Mirrors	Heated	
Fog Lamps	Yes	
Keyless Central Locking	Yes	
7" Touchscreen Media Unit	AM/FM/DAB + USB + AUX Apple CarPlay and Android Auto Wi-Fi enabled for Internet Radio Bluetooth 32GB capacity storage HD Reverse Camera included †	NEW

CHASSIS

Speed Limter	Yes (activated and adjustable by FUSO dealer)
Anti-Lock Braking System (ABS)	Yes
Anti-Slip Regulator (ASR)	Yes
Electronic Brake Force Distribution (EBD)	Yes
Disc Brakes	Auto-Adjusting, 4 Wheel Dual Caliper
Brake Priority System	Yes
Exhaust Brake	Yes
Hill Start Assist	Yes
Reverse Warning Buzzer	Yes
Anti Roll Bar	Yes
Brake Wear Indicator	Yes

OPTIONS

† Additional Multimedia Display Cameras (up to 4)
Truck Specific GPS Navigation
Reversing Sensors
Tyre Pressure Monitoring System
Wireless Phone Charge Pocket
Campervan spec – Underseat Engine Access

KERB WEIGHTS AND MAX AXLE LOADS (kg)

		Vehicle Ratings**		Max Axle Loadings**		Kerb Weights*		
Model		**GVM**	**GCM**	**Front**	**Rear**	**Front**	**Rear**	**Total**
4x2 918 Wide Cab 6 Sp. AMT	**FECX1GR3SFBD**	8,550	12,050	3,100	6,000	1,580	890	2,470
4x2 918 Wide Cab 6 Sp. AMT	**FECX1HR3SFBD**	8,550	12,050	3,100	6,000	1,615	890	2,505

*** Weights (est.) includes 10L fuel and spare wheel and are subject to 2.5% variation (+/-)**

**** Vehicle ratings and max axle loadings may be limited by local regulations.**

SPECIFICATIONS - CANTER 918 LWB

PERFORMANCE

Turning Circle (kerb to kerb - metres)	G = 13.6 H = 15.0
Road Speed (km/h) at Max Engine Speed	130
Engine Speed (rpm) at 90km/hr (top gear)	2420
Gradeability at Rated GVM (theoretical)*	32%
Notes	*This is theoretical performance only. Actual performance may vary under different conditions

DIMENSIONS (mm)

	G Wheelbase	H Wheelbase
Wheelbase	3,850	4,300
Length Overall	6,685	7,185
Height Overall	2,190	2,190
Width Overall	2,140	2,140
Width Rear Axle	2,140	2,140
Width Front Track	1,675	1,675
Width Rear Track	1,670	1,670
Width Frame	850	850
Height Frame at Rear Axle	795	795

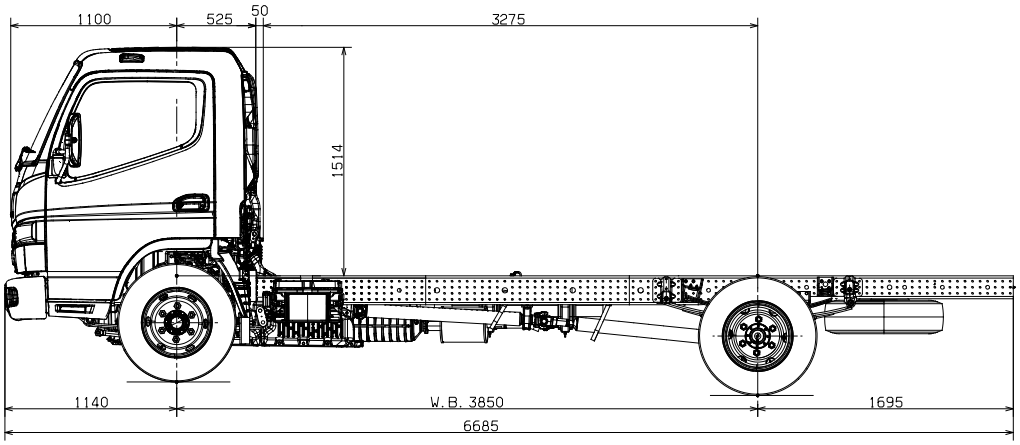

CANTER 918 WIDE CAB – 'G' WHEELBASE

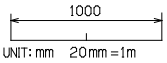

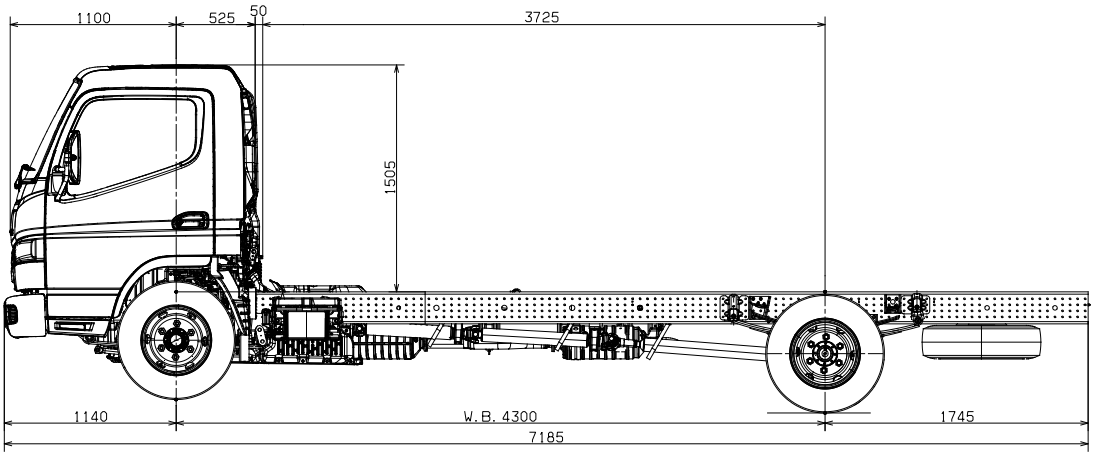

CANTER 918 WIDE CAB – 'H' WHEELBASE

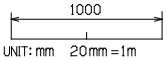

Scale = 1:50 (20mm = 1 metre). This scale is accurate when used on the original spec sheet, be aware that enlarging these illustrations can alter the scale and cause incorrect measurements. Fuso New Zealand and its authorised dealers always recommend customers seek professional advice from independent sources before commencing any engineering activities.

A policy of continual improvement means that specifications detailed in this brochure are subject to change without notice. Contact your authorised Fuso dealer to confirm current specifications. Fuso is a registered trademark of Mitsubishi Fuso Truck & Bus Corporation. Copyright © Fuso NZ (2017)